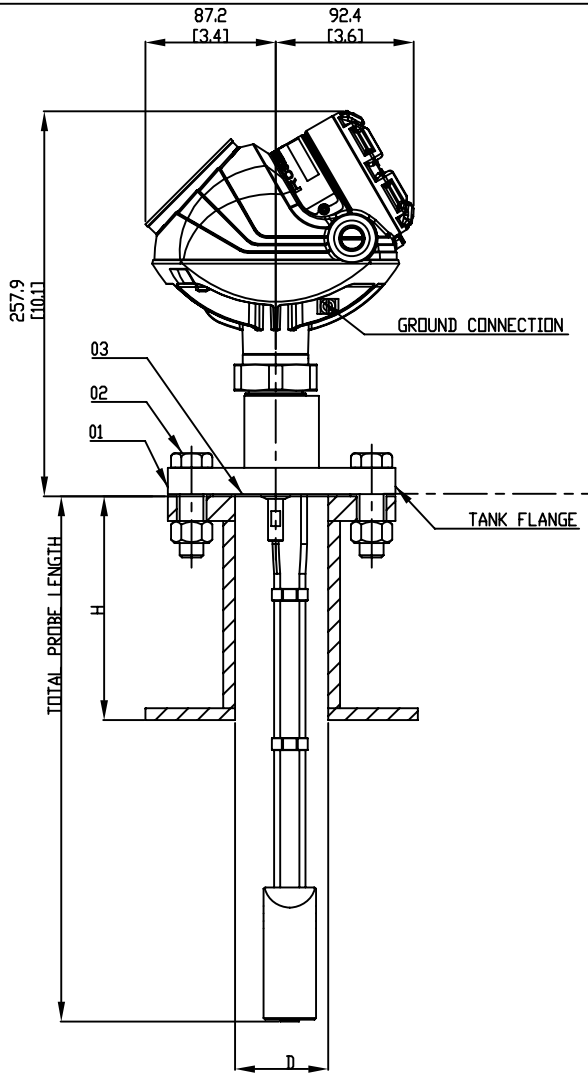


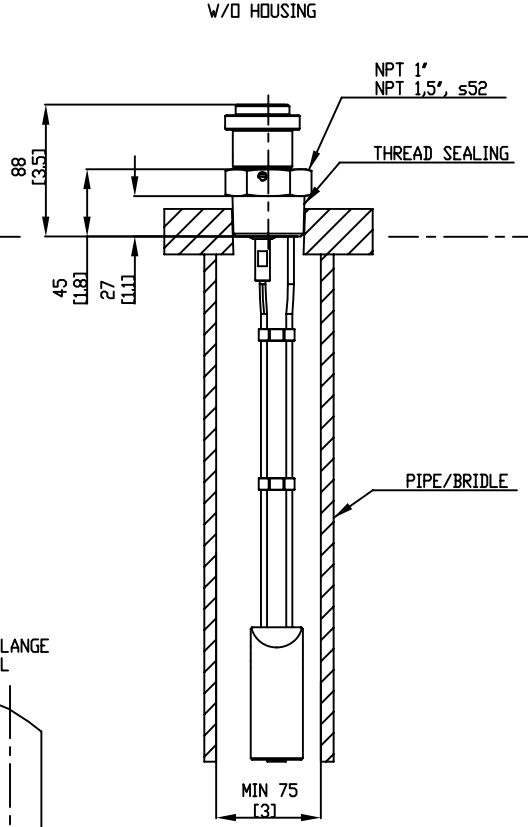


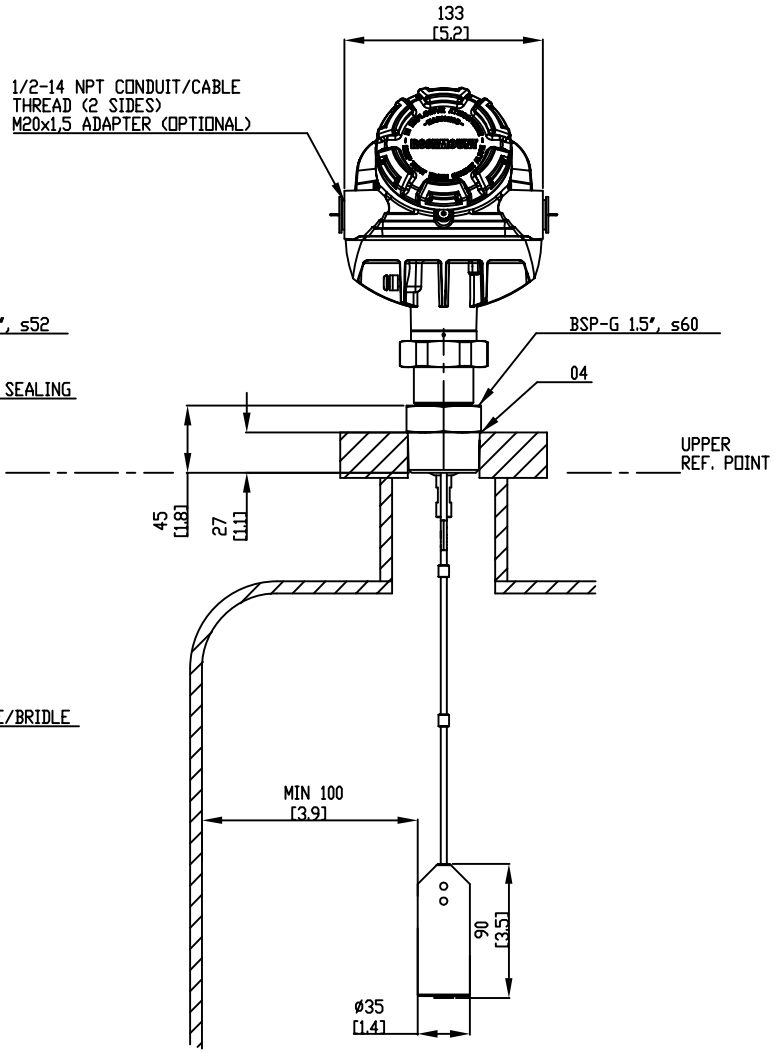


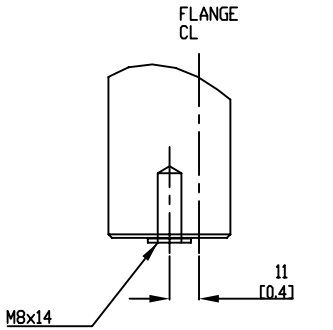


RECOMMENDED D>150 [6]
MIN D=50 [2] REQUIRES
SPECIAL CONFIG SETTINGS.

MAX REC. H<(D+100) [D+4]

DEPENDING ON TURBULENCE IN TANK AND MOUNTING ANGLE THE PROBE MAY NEED TO BE ANCHORED OR SUPPORTED.

ENSURE MID PROBE HAS NO CONTACT WITH WALL.

FOR MORE INFO SEE REFERENCE MANUAL

1. P/T-RATING FOR FLANGE, SEE REF MANUAL.

| POS | ITEM DESCRIPTION | QTY | REMARK | SUPPLIER |
|---|---|---|---|---|
| 04 | GASKET | 1 | ACC. TO BSP-G THREAD STD. | CUSTOMER |
| 03 | GASKET | 1 | SOFT GASKET T=MIN 1.6 (ANSI B16.5/1a, EN1514-1/1BC). SEE NOTE 1. | CUSTOMER |
| 02 | SCREW/NUT/WASHER | - | ACC. TO FLANGE STD, SEE NOTE 1. | CUSTOMER |
| 01 | FLANGE | 1 | DIM. ACC. TO ANSI B 16.5/EN 1092-1. OTHER ON REQUEST. P/T RATING, SEE NOTE 1. | RMT |

| ISSUED BY | WEEK | PRODUCT CODE | FILE | INSTALLATION DRAWING TITLE |
|---|---|---|---|---|
| GU-TK-TR | 0640 | 5300 | PRO/E | MECHANICAL INSTALLATION DWG FLEXIBLE TWIN LEAD |
| APPROVED BY | WEEK | ORIGINAL DWG NO. | SCALE | |
| GU-HF | 0640 | | | |

ROSEMOUNT® | 1 ST ANGLE | DOC TYPE 2 | DWG NO. 9240030-994 | ISSUE 01 | SHEET 1/1

THE COPYRIGHT/OWNERSHIP OF THIS DOCUMENT IS AND WILL REMAIN OURS. THE DOCUMENT MUST NOT BE USED WITHOUT OUR AUTHORIZATION OR BROUGHT TO THE KNOWLEDGE OF A THIRD PARTY. CONTRAVENTION WILL BE PROSECUTED. ROSEMOUNT TANK RADAR AB, SWEDEN.

| PART | LINK DATA | REV |
|---|---|---|
| 00-7 | ISSUE-VER | 00-5 |

INST DWG A3 061023