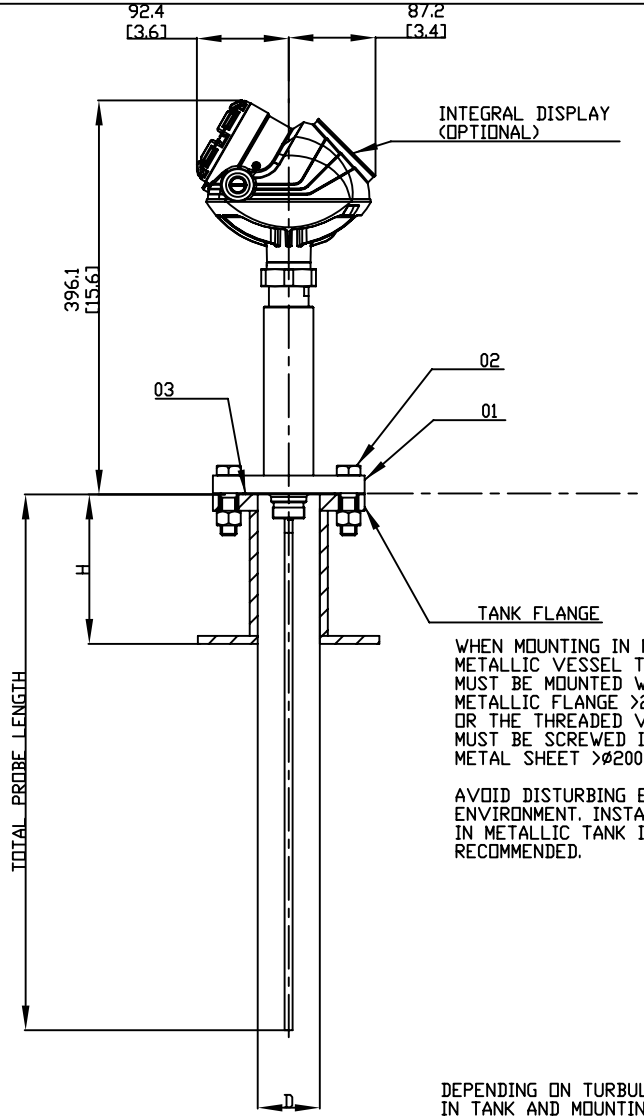

WHEN MOUNTING IN NON-METALLIC VESSEL THE PROBE MUST BE MOUNTED WITH A METALLIC FLANGE >2"/DN50 OR THE THREADED VERSION MUST BE SCREWED IN TO A METAL SHEET >ø200 [7.8]

AVOID DISTURBING EMC-ENVIRONMENT. INSTALLATION IN METALLIC TANK IS RECOMMENDED.

DEPENDING ON TURBULENCE IN TANK AND MOUNTING ANGLE THE PROBE MAY NEED TO BE ANCHORED OR SUPPORTED.

RECOMMENDED D>150 [6]. MIN. D=50 [2] REQUIRES SPECIAL CONFIG. SETTINGS.

MAX REC. H<(D+100) [D+4]

ENSURE THAT PROBE HAS NO CONTACT WITH NOZZLE/TANK WALL.

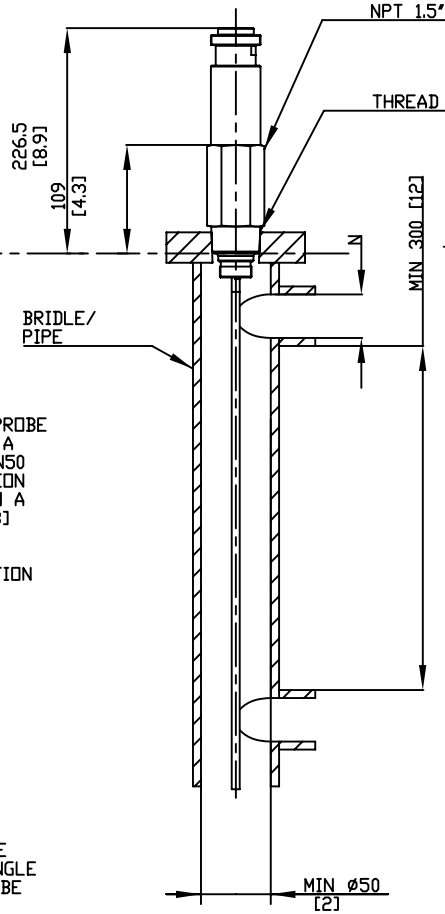

THE PROBE MUST BE IN THE CENTER OF THE BRIDLE/PIPE.

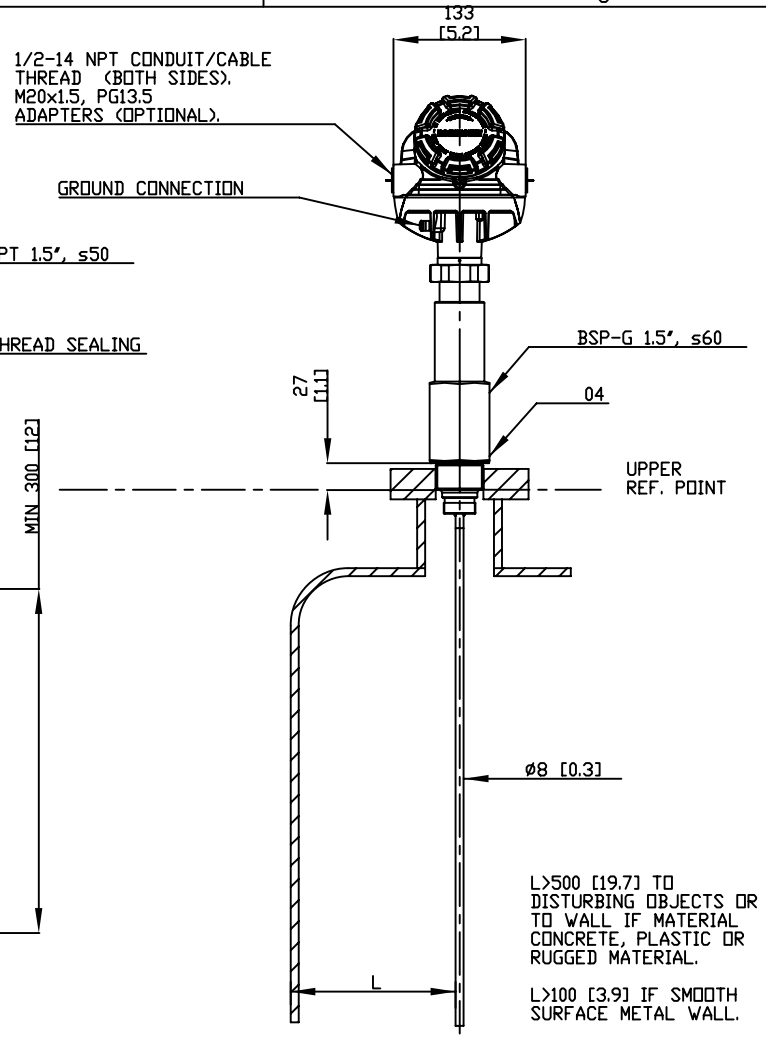

L>500 [19.7] TO DISTURBING OBJECTS OR TO WALL IF MATERIAL CONCRETE, PLASTIC OR RUGGED MATERIAL.

L>100 [3.9] IF SMOOTH SURFACE METAL WALL.

(1) P/T-RATING FOR FLANGE; SEE REF. MANUAL.

POS	ITEM DESCRIPTION	QTY	REMARK	SUPPLIER
04	GASKET	1	ACC. TO BSP-G THREAD STD.	CUSTOMER
03	GASKET	1	SOFT GASKET T=MIN 1.6 (ANSI B16.5/1a, EN1514-1/1BC). SPIRAL WOUND GASKET WITH NON METALLIC FILLER (ANSI B16.5/1b, EN1514-2), SEE NOTE 1.	CUSTOMER
02	SCREW/NUT/WASHER	-	ACC. TO FLANGE STD, SEE NOTE 1.	CUSTOMER
01	FLANGE	1	DIM. ACC. TO ANSI B 16.5/EN 1092-1. OTHER ON REQUEST. P/T RATING, SEE NOTE 1.	RMT

ISSUED BY	WEEK	PRODUCT CODE	FILE	INSTALLATION DRAWING TITLE
GU-TK-MA	0707	5300	PRO/E	MECHANICAL INSTALLATION DWG RIGID SINGLE LEAD HTHP
APPROVED BY	WEEK	ORIGINAL DWG NO.	SCALE	
GU-HF	0707		1:5	

ROSEMOUNT® | 1 ST ANGLE | DOC TYPE 2 | DWG NO. 9240017-994 | ISSUE 01 | SHEET 1/1

THE COPYRIGHT/OWNERSHIP OF THIS DOCUMENT IS AND WILL REMAIN OURS. THE DOCUMENT MUST NOT BE USED WITHOUT OUR AUTHORIZATION OR BROUGHT TO THE KNOWLEDGE OF A THIRD PARTY. CONTRAVENTION WILL BE PROSECUTED. ROSEMOUNT TANK RADAR AB, SWEDEN.

FOR MORE INFO. SEE REFERENCE MANUAL.

PART	LINK DATA	REV
00-0	ISSUE-VER	XX00-XXXX

INST DWG A3 061023